used for:

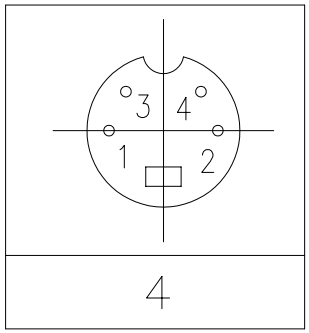

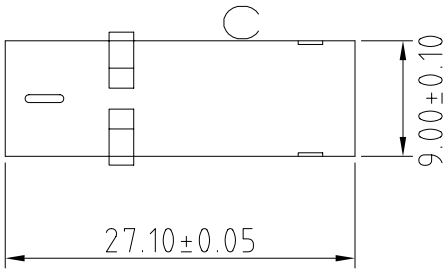

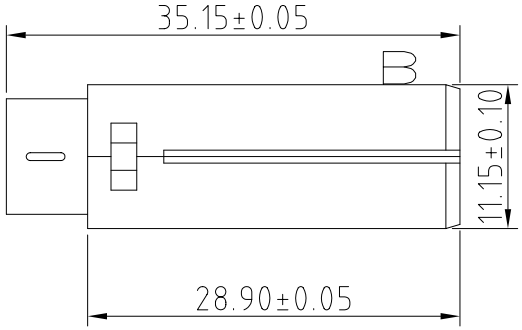

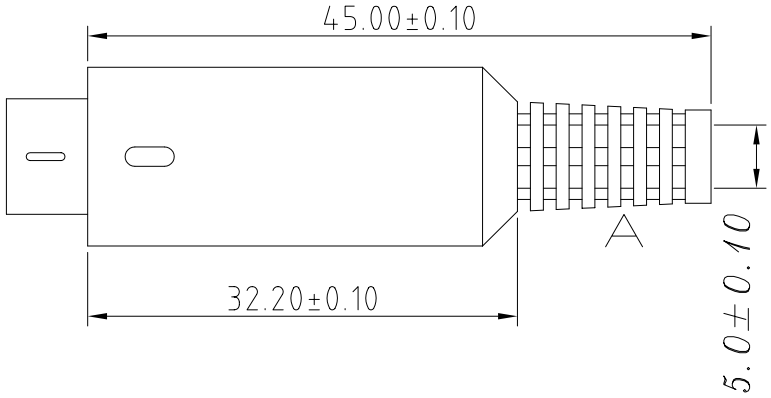

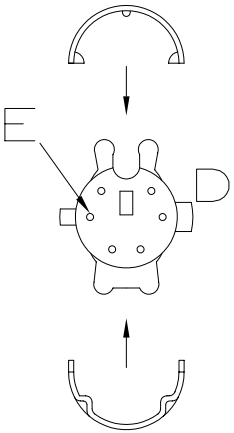

SPECIFICATIONS:
1.RATING:11V AC 1A MAX
OR 12V DC 2A MAX.
2.INSULATION RESISTANCE:
50M OHM MIN AT 500V DC.
3.DIELECTRIC STRENGTH:
500V AC / 1 MINUTE.

MATERIAL:
A.COVER: PE+2L
B.SHELL: ABS
C.METAL SHIELD: BRASS NICKEL PLATED
D.HOUSING: NYLON66+GF
E.CONTACT: BRASS SILVER PLATED

Directive 2002/95/EC „RoHS" Compliant

	6.0ø BACK SHELL
	5.5ø BACK SHELL
	5.0ø BACK SHELL (STANDARD)
	4.8ø BACK SHELL
	COVER DIM.

THIS DRAWING MAY NOT BE COPIED OR REPRODUCED IN ANY WAY, AND MAY NOT BE PASSED ON TO A THIRD PARTY WITHOUT WRITTEN PERMISSION. OWNERSHIP AND COPYRIGHT OF CONEC CORPORATION

DO NOT ALTER CAD DRAWING BY HAND

tolerance: unless otherwise specified tolerance shall be as follow
Decimal: X, X.X, X.XX Angles:

finish

Dim. in mm

rev.	description	date	name
a	origin		

	date	name
2006		
draw.	Aug. 22	Vincent Ke
appd.	Aug. 22	R. Santangelo
norm		
d-old		

CONEC®

scale:
material: SEE MATERIALS
title: Mini Din Plug
RoHS compliant
drawing no.: 39K1A263
AutoCAD 2005
DIN A3
sheet 1/1
part no.: 301A10479X